Frame Relay Map
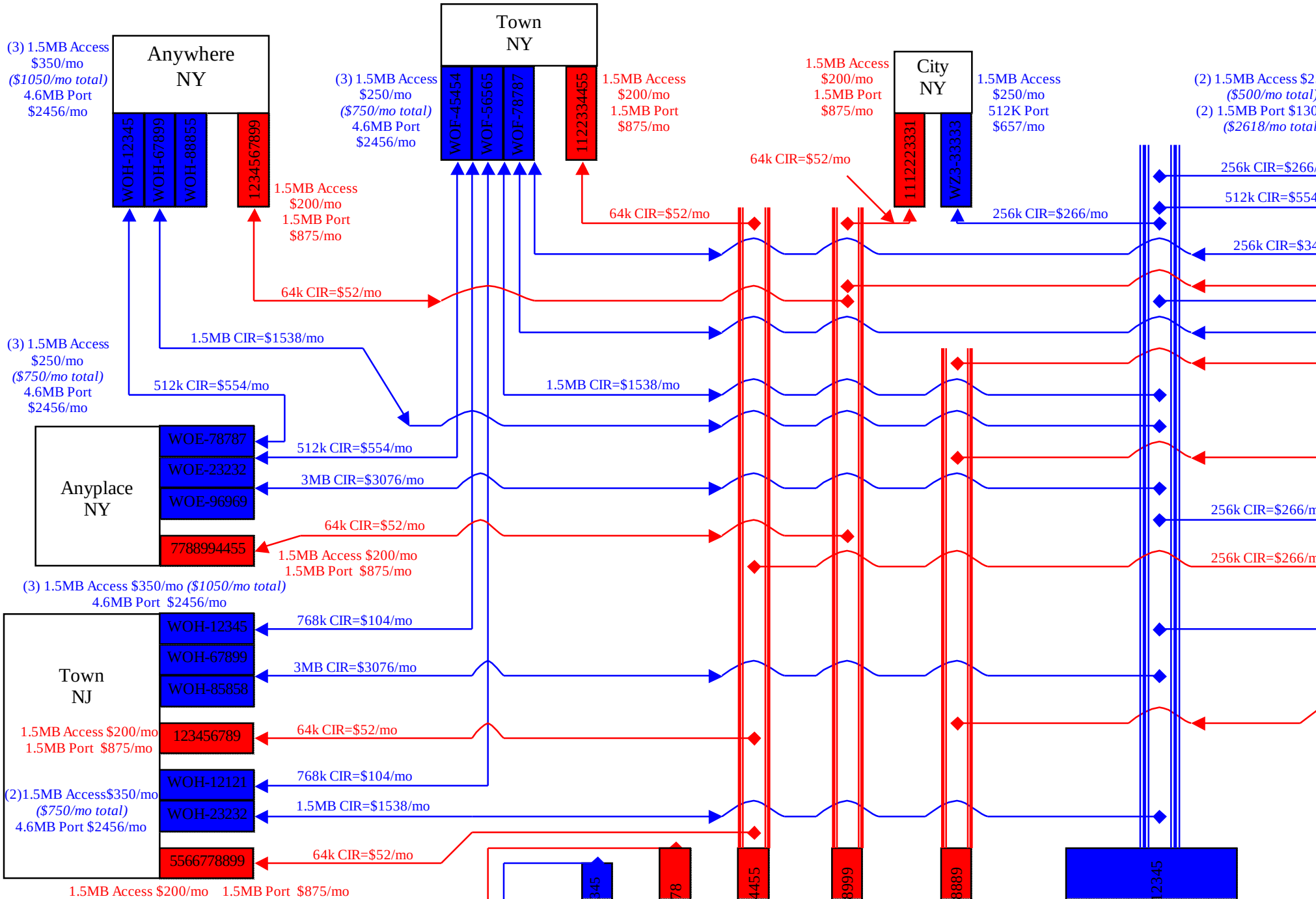
Prepared by:
Communications Research Consultants, Inc